SWIT®

VANGO-70/VANGO-100
RGBW LED PANEL LIGHT
Ver:A

USER MANUAL

SWIT Electronics Co.,Ltd.

Tel:+86-25-85805753
Fax:+86-25-85805296
http://www.swit.cc
E-mail: contact@swit.cc

Thank you for choosing SWIT products. Please read the instructions before using, and keep it for future reference.

Specification

Model		**VANGO-70**	**VANGO-100**
LED QTYs		RGB LED (120pcs) +Warm white LED(200pcs)	RGB LED (180pcs) +Warm white LED(300pcs)
White light	Color Temperature	2800K-10000K, Adjust step 50K	
	Intensity	0%-100%, Adjust step 0.1%	
	Illuminance	1500lux@1m	2200Lux@1m
	CRI	96 Max., Avg 95	
	TLCI	93 Max., Avg 90	
RGB Light		RGB+W、Hue、Saturability adjustment	
G-M Offset		Continuous adjustment (-1.00～+1.00, Adjust step 0.01)	
Half Beam Angle		About 65°	
Mode		CCT、HSI、RGB、CIE、GEL、EFF、DMX、SYS	
Control		Button、DMX、APP	
Update		USB: (Format"FAT" or "FAT32")	
Power	Working Voltage	DC11-34V	
	Power Consumption	About 70W	About100W
	Power Supply	Power Adaptor、BAT	
Dimension	Without Frame(L x W)	254mm x 254mm	522mm x 254mm
	With Frame(L x W x H)	See Fig.2	
Weight		3.3Kg 4.0Kg (With Barndoor)	5.0Kg 6.0Kg (With Barndoor)

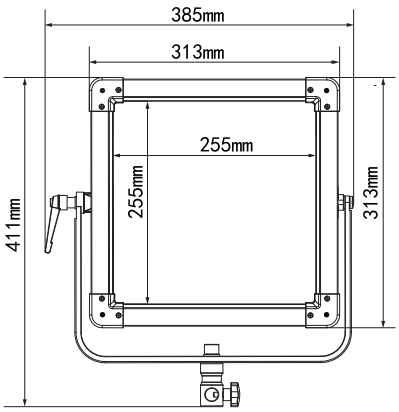

Fig.1 VANGO-70 Front View

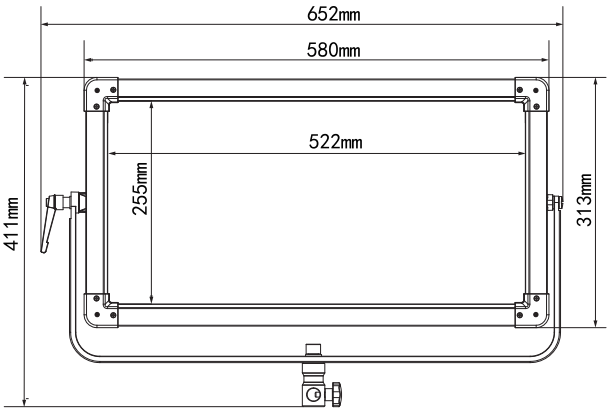

Fig.2 VANGO-100 Front View

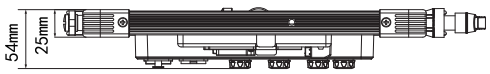

Fig.3 VANGO-70/100 Side View

Warning

1.Please do not disassemble the light or touch its inner part with metal object to avoid damage;
2.Please do not put the light under conditions full of moisture or dust to avoid damage;
3.Only use the light in the temperature range of -10°C～40°C.

Maintenance

1. Please clean the front LED panel with soft dry cloth. If using soft cloth with slight clean neutral detergent solution, please wipe again with a soft dry cloth.
2. Do not use wet cloth, anhydrous alcohol, gasoline or a mixture of anhydrous alcohol and ether etc. to wipe the front LED panel.

Appearance

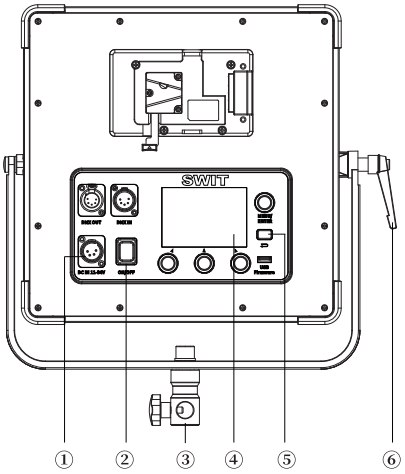

Fig.4 VANGO-70 Back View

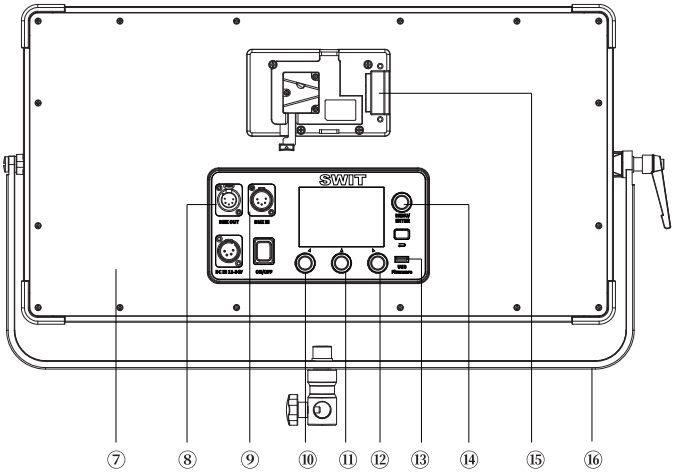

Fig.5 VANGO-100 Back View

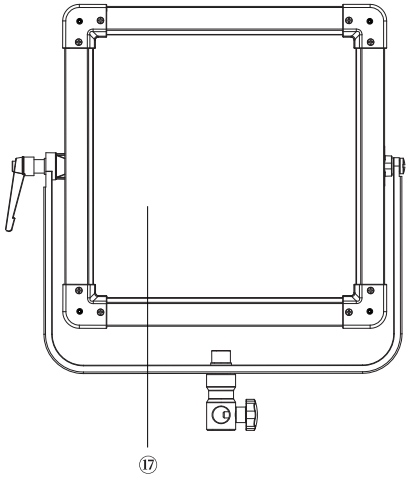

Fig.6 VANGO-70 Front View

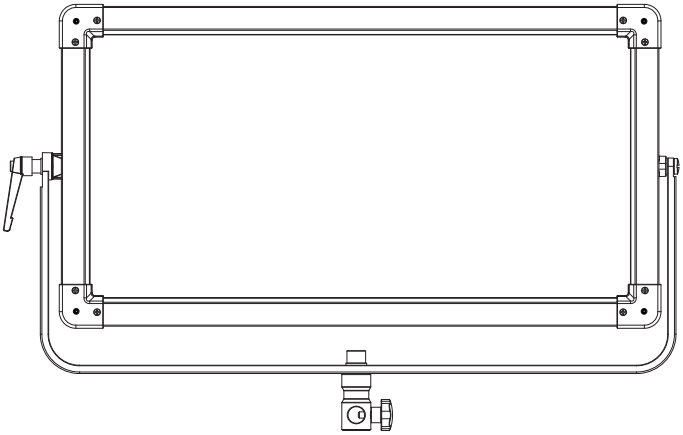

Fig.7 VANGO-100 Back View

① DC IN 11-34V
② POWER ON/OFF
③ STAND ADAPTOR
④ LCD SCREEN
⑤ "BACK"
⑥ YOKE TILT LOCK KNOB
⑦ BACK FRAME
⑧ DMX OUT
⑨ DMX IN
⑩/⑪/⑫ ADJUST KNOB
⑬ USB PORT
⑭ MENU/ENTER BUTTON
⑮ BATTERY PLATE
⑯ YORK
⑰ DIFFUSER

TIPS：FIG.5 ⑩/⑪/⑫parameter adjustment knob for reuse knob，different modes have different functions

Accessories Installation

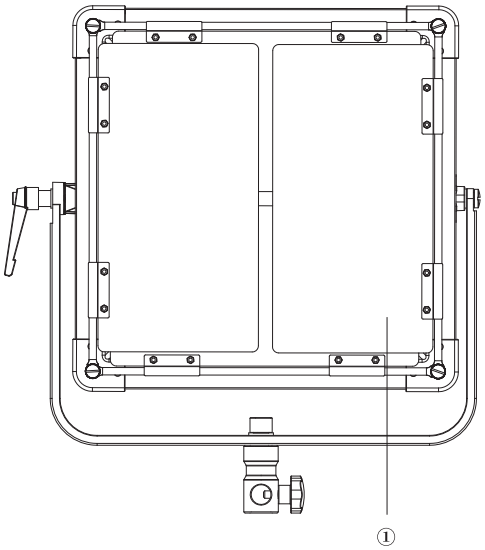

Fig.8 Barndoor Installation

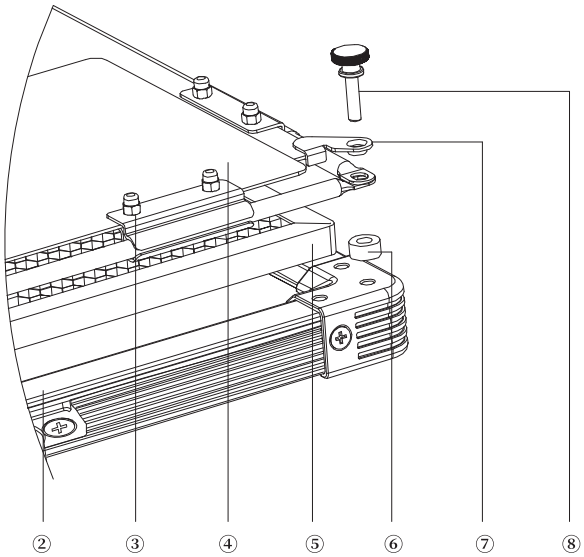

Fig.9 Barndoor with Honeycomb (small) Installation

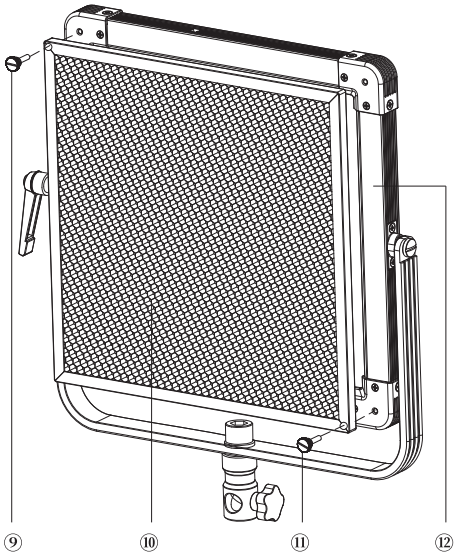

Fig.10 Honeycomb (Big) Installation

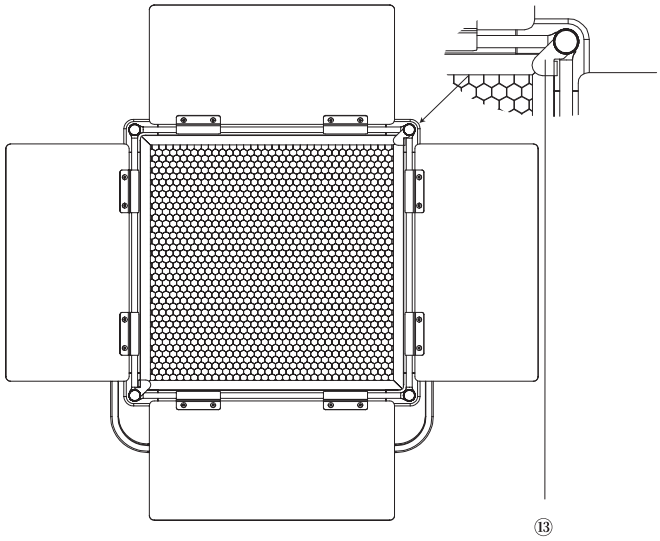

Fig.11 Honeycomb (small) Installation

① Barndoor	⑤ Honeycomb (Small)
②/⑫ Frame	⑥ Spacer
③ Screws	⑦/⑬ Pressing plate
④ Barndoor	⑧/⑨/⑪ Screws

- The Installation of barndoor, please see Fig.8, 9.
  Tips: When installing, place the round head screw of the barndoor upward

- Please confirm the type of honeycomb before using(The size of honeycomb shown as below):

1) Big honeycomb
   The Installation of big honeycomb, please see Fig.10.
2) Small honeycomb
   Small honeycomb can be used with barndoor in the same time, rotate the pressing plate to lock the small honeycomb after Installation, see Fig.11.

Type	VANGO-70	VANGO-100
Big(L*W*H)	290mm*290mm*10mm	558mm*290mm*10mm
Small(L*W*H)	268mm*268mm*10mm	536mm*268mm*10mm

User control

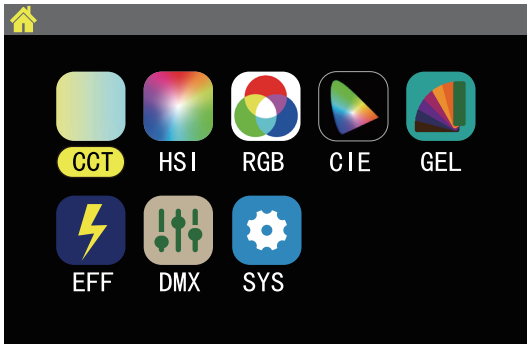

Fig.12 Main Menu

When the light is working:

- User can return back to Menu via" "button (Fig.4 ⑤);
- Use "ADJUST KNOB" (Fig.5 ⑩/⑪/⑫) to select different mode;
- Use"MENU/ENTER" (Fig.5 ⑭) to enter different mode.

1.CCT Mode

In this mode, User can adjust"CT", "G/M", "I" via"ADJUST KNOB" Fig.5 ⑩/⑪/⑫

No.	Parameter	Adjustment Step	Minimum Step
1	CT(Color Temp)	2800K-10000K	50K
2	G/M	-1.00← +0.00→+1.00	0.01
3	I(Intensity)	0%-100%	0.1%

Form.1【CCT Mode】

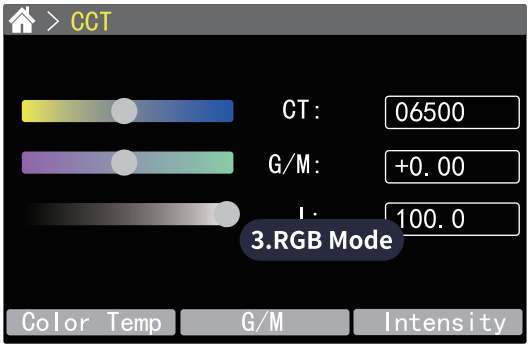

Fig.13 CCT Mode

2.HSI Mode

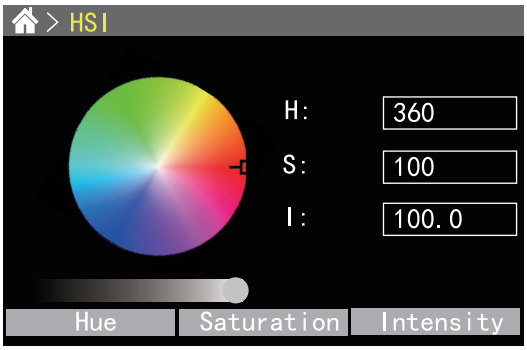

Fig.14 HSI Mode

In this mode, User can adjust"H", "S", "I" via "ADJUST KNOB" Fig.5 ⑩/⑪/⑫

No.	Parameter	Adjustment Step	Minimum Step
1	H(Hue)	1°-360°	1°
2	S(Saturation)	0%-100%	1%
3	I(Intensity)	0%-100%	0.1%

Form.2【HSI Mode】

3.RGB Mode

In this mode, User can adjust"R", "G", "B" via"ADJUST KNOB" Fig.5 ⑩/⑪/⑫

No.	Parameter	Adjustment Step	Minimum Step
1	R(Red)	000-255	1
2	G(Green)	000-255	1
3	B(Blue)	000-255	1

Form.3【RGB Mode】

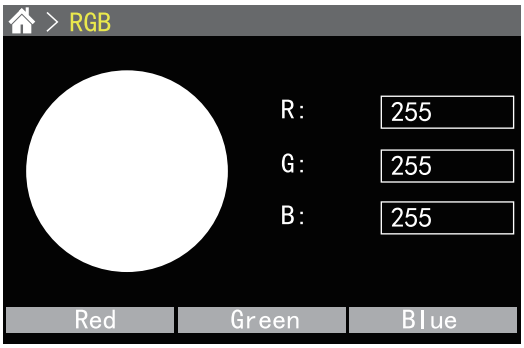

Fig.15 RGB Mode

4.CIE Mod

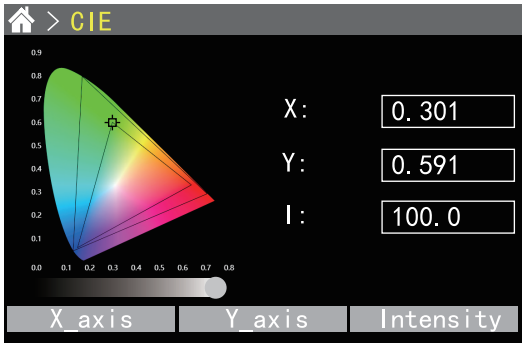

Fig.16 CIE Mode

In this mode, User can adjust"X", "Y", "I"via "ADJUST KNOB" Fig.5 ⑩/⑪/⑫

No.	Parameter	Adjustment Step	Minimum Step
1	X_axis	0.131-0.708	0.001
2	Y_axis	0.046-0.797	0.001
3	I(Intensity)	0%-100%	0.1%

Form.4【CIE Mode】

5.GEL Mode

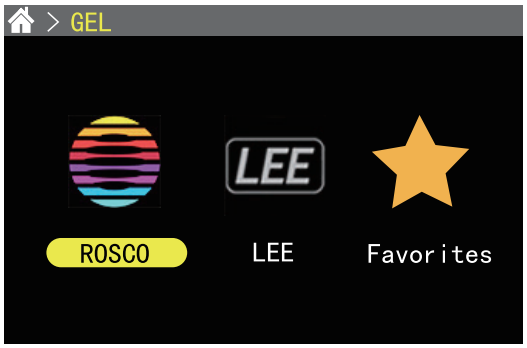

Fig.17 GEL Mode

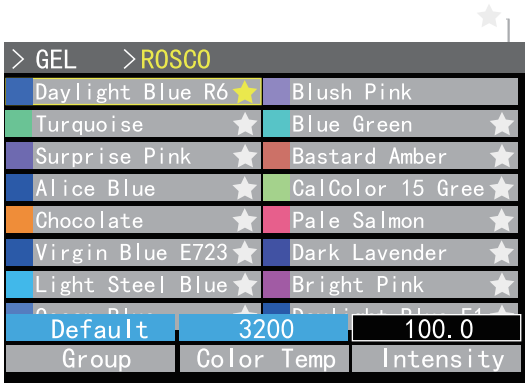

Fig.18 GEL Mode (ROSCO)

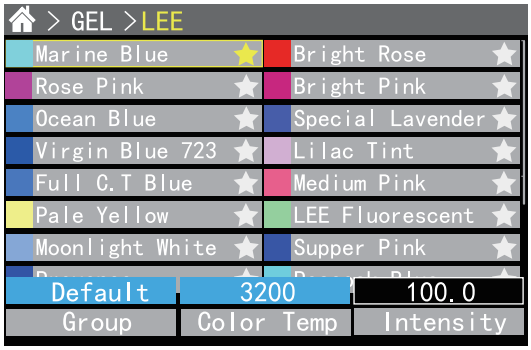

Fig.19 GEL Mode (LEE)

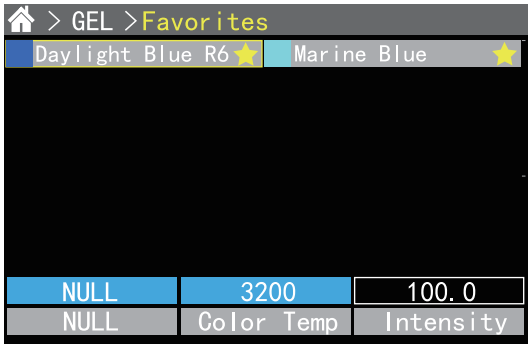

Fig.20 GEL Mode (Favourities)

User can choose different filters and adjust the "Intensity", "Color Temp"in this mode:

1) "MENU/ENTER"

▶ Rotate：To choose different selection

▶ Press：Enter into ROSCO/LEE/favourities, put the filters into your facourities.

2) "ADJUST KNOB"：Fig.5 ⑩/⑪/⑫, to adjust different parameters.

No.	Selection	Adjustment
1	ROSCO	1.20 kinds of Filters 2.Color temperature:3200K/5600K 3.Intensity：0%-100%, Minimum steps：0.1%
2	LEE	1.20 kinds of Filters 2.Color temperature：3200K/5600K 3.Intensity：0%-100%, Minimum steps：0.1%
3	Favorites	1.Color temperature:3200K/5600K 2.Intensity：0%-100%, Minimum steps：0.1%

Form.5【GEL Mode】

6.EFF Mode

User can choose from 12 kinds of effect in this mode "COPCAR"、" CANDLE", "FIREWORK", "TELEVISION", "LIGHTNING", "PAPARAZZI", "PARTY", "BROKEN LIGHTS", "EXPLODE", "NEON LIGHT", "FIRE"and "COLORCYCLE".

In this mode, User can select different Effect via "MENU/ENTER" button (Fig.5 ⑭), adjust"Speed"、"Intensity" via "ADJUST KNOB" Fig.5 ⑩/⑪/⑫:

No.	Parameter	Adjustment Step	Minimum Step
1	Effect	COPCAR, FIREWORKS Etc.	/
2	Speed	1-10	1
3	Intensity	0%-100%	0.1%

Form.6【Effect Mode】

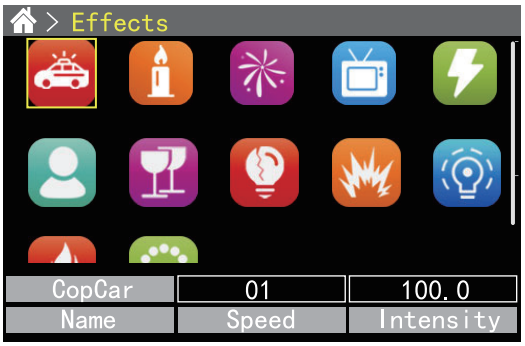

Fig.21 EFF Mode

7.DMX Mode

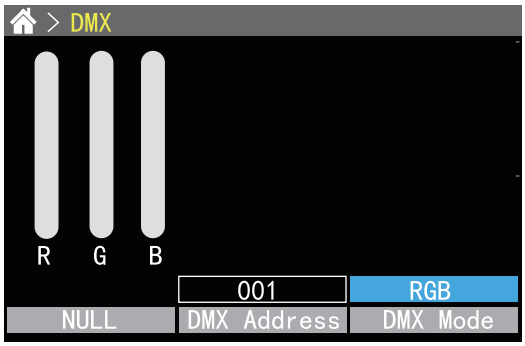

Fig.22 DMX Mode

User need to switch on DMX function in "SYS"-DMX ON/OFF, then user can adjust"DMX Address","DMX Mode" via "ADJUST KNOB" Fig.5 ⑩/⑪/⑫

No.	Parameter	Adjustment Step	Minimum Step
1	DMX Address	001-512	001
2	DMX Mode	CCT、HIS、RGB、CIE、CCT&HSI、CCT&CIE、CCT&RGB	/

Form.7【DMX Mode】

7.1 DMX Address and DMX Mode

The DMX address and DMX Mode can be set in the following two ways:

1) Set in "DMX mode"(Fig.22);

2) Set in "SYS"-"DMX Address"/"DMX Mode".

7.2 DMX Channel Setting

DMX address adjustment range：001-512, suppose the current address is N：

No.	DMX Mode	Channel	Definition
1	CCT	N	Intensity:0%-100%
		N+1	Color Temperature:2800K-10000K
		N+2	G/M:-1.00→+1.00
2	HSI	N	Intensity:0%-100%
		N+1	Hue:1°-360°
		N+2	Saturation:0%-100%
3	RGB	N	Red:0-255
		N+1	Green:0-255
		N+2	Blue:0-255
4	CIE	N	Intensity:0%-100%
		N+1	X_axis:0.131-0.708
		N+2	Y_axis:0.046-0.797
5	CCT&HSI	N	Intensity:0%-100%
		N+1	Color Temperature:2800K-10000K
		N+2	G/M:-1.00→+1.00
		N+3	Mode Change (CCT→HSI)
		N+4	Hue:1°-360°
		N+5	Saturation:0-100%
6	CCT&CIE	N	Intensity:0%-100%
		N+1	Color Temperature:2800K-10000K
		N+2	G/M:-1.00→+1.00
		N+3	Mode Change (CCT→CIE)
		N+4	X_axis:0.131-0.708
		N+5	Y_axis:0.046-0.797
7	CCT&RGB	N	Intensity:0%-100%
		N+1	Color Temperature:2800K-10000K
		N+2	G/M:-1.00→+1.00
		N+3	Mode Change (CCT→RGB)
		N+4	Red:0-255
		N+5	Green:0-255
		N+6	Blue:0-255

Form.8【DMX Mode】DMX

8. SYS(System)

Select【SYS】, press MENU/ENTER to enter into the sub menu:

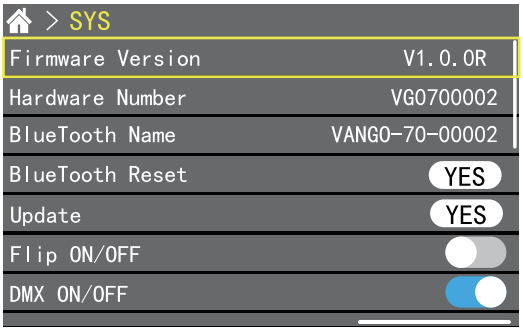

Fig.23 System

8.1【Firmware Version】&【Hardware Number】

Show the information of the version of the device.

8.2【Bluetooth Name】

User can rename the Bluetooth of the device via "MENU/ENTER" button.

8.3【Bluetooth Reset】

In the process of using the APP to control the lamp，if the APP loses control or the target lamp cannot be found，the user can choose to try to reset the target lamp.

The bluetooth reset steps is as follows: Choose【Bluetooth Reset】-【Yes】to reset the bluetooth.

8.4 Update

Prepare the update firmware and U-disk（Make sure the format of U-disk is：FAT32），connect U-disk with USB port of the light，Choose【Update】-【Yes】，after updating，reboot your light to finish the updating.

Tips：The firmware need to be saved into the root of the U-disk.

8.5 LCD Flip

Choose【Flip ON/OFF】to switch ON/OFF screen flip function.

8.6 DMX Mode

Choose【DMX ON/OFF】to switch ON/OFF DMX function.

8.7 DMX Address

Choose【DMX Address】to set DMX address from 001-512.

8.8 DMX Mode

Choose【DMX ON/OFF】to select from different DMX Mode.

8.9 Light Curve

Choose【Light Curve】to select from different Light Curve.

8.10 Language

Choose【Language】to change language to Chinese or English，reboot your light after choosing the language.

8.11 EFF File Import

Put the Effect files in your U-disk，choose【EFF File Import】，select the Effect files you want to import，choose-【yes】to import the Effect files.

Tips：Make sure the Effect files you saved is in the U-Disk VANGO-70"or"U-Disk > VANGO-100"

8.12 GEL File Import

Put the GEL files in your U-disk，choose【GEL File Import】，select the GEL files you want to import，choose-【yes】to import the GEL files.

Tips：Make sure the filters files you saved is in the U-Disk VANGO-70"or"U-Disk > VANGO-100"

8.13 EFF File Delete

Choose【EFF File Delete】，select the Effect files you want to delete，choose【Yes】to delete the Effect files.

8.14 GEL File Delete

Choose【GEL File Delete】，select the GEL files you want to delete，choose【Yes】to delete the GEL files.

8.15 All Files Import

User can Import all Effect files and GEL files from the U-disk via this function:

Choose【All Files Import】-【Yes】to import all Effect and GEL files from your U-disk to the light.

8.16 System Reset

User can do factory reset to reset Bluetooth and Userdata.

8.17 Factory Menu

Not available to users.

APP

1. APP name and download

1) Name：SWIT Console

2) Download

Android：Scan QR to Install(Fig.24);

IOS：Apple Store

Fig.24 APP

Packing list

No.	Content	Quantities
1	VANGO-70/VANGO-100 (with barndoor)	x 1
2	V-mount belt	x 1
3	Light bag	x 1
4	AC Adaptor	x 1
5	Power cable	x 1
6	Honeycomb (Optional)	Optional